WERLATONE

Model WPM11326
Coaxial Power Meters



PRODUCT DATA SHEET **WPM11326**

Instantaneous & Simultaneous
- Local and/or Remote Monitoring
- Forward Power Reading/Monitoring (Watts or dBm)
- Reverse Power Reading/Monitoring (Watts or dBm)
- VSWR Readings (Watts, Return Loss, Rho)

VSWR Alarm
- Customer can set up audio/visual alarm via relay contacts.
- Signal sent to closed loop.

Temperature Monitoring (with alarm)
- One sensor, internal measurement, within Power Meter.
- One sensor, external measurement, to be placed by customer.

General Purpose Inputs (6 ea) Multiple Use
- Track switch closures (assign to interlock group).
- Trigger alarm relay (sends email alert).
- RF presence status/alarm (saftey feature).
- Alarm, activated switch.

Accessories:
- Single Channel and Multi-Channel Displays
- RF Digital Dashboard Spreadsheet Software, (Simultaneously
Monitor Outputs of 30+ Power Meters
- PC Based Graphical User Interface Windows XP/7/8/10 Compatible

Accuracy:
- ± 2% to Customer Calibration Standard, at preselected frequencies.
- ± 5% over a Multi-Octave Bandwidth
- Werlatone Calibration Traceable to (NIST) National Institute of Standards and Technology

Power:
- AC Power Adapter (100/240 50-60 Hertz V AC)
- POE (Passive Over Ethernet, Optional POE Injector Kit Available
- Via RS485 (Via Single Channel or Multi-Channel Displays)

Interface (Via):
- TCP/IP - SNMP and Browser Interface via Local Area Network
- RS232, Serial
- RS485 - Form Addressable Serial Network
- User ID and Password Protected for Access and Control
- Multiple units can be Networked and Simultaneously Monitored On-Site or Remotely (TCP/IP/SNMP/Serial)

RoHS Compliant Design Available
Custom Connector Configurations Available

Electrical Specifications:

Frequency:	2 - 50 MHz
Power:	10,000 W CW

Mechanical Specifications:

Type:	Connectorized
Operating Temperature:	-55°C to +75°C
Storage Temperature:	-60°C to +85°C

Connector Configurations:

Model	Input(J1)	Output(J2)
WPM11326-83	1 5/8" EIA	1 5/8" EIA

Restriction on use, duplication, or disclosure of proprietary information. This document contains proprietary information which is the sole property of Werlatone, Inc.
Werlatone, Inc. 17 Jon Barrett Road Patterson, NY 12563 T:(845)278-2220 F:(845)278-3440 sales@werlatone.com www.werlatone.com

Werlatone, Inc.All Rights Reserved

RESTRICTION ON USE, DUPLICATION OR DISCLOSURE OF PROPRIETARY INFORMATION
This document contains proprietary information which is the sole property of Werlatone, Inc.

REVISION HISTORY			
REV.	REVISION RECORD	DATE	APPROVED
-	INITIAL RELEASE	7/6/2020	CS
A	ECN 9965	9/29/2020	CS

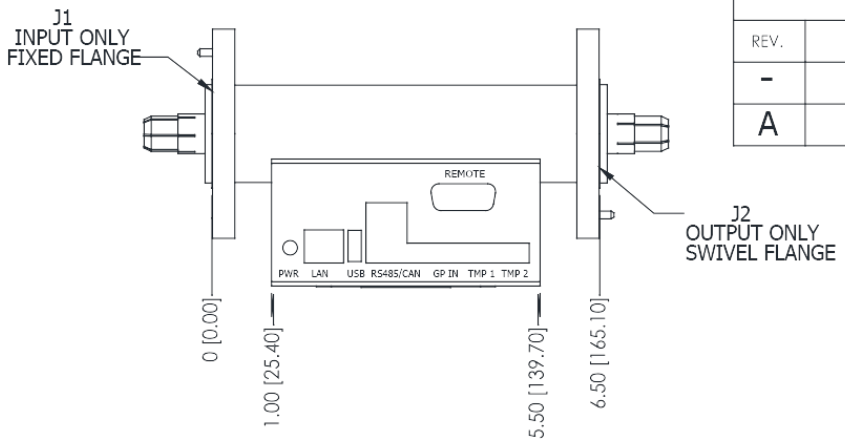

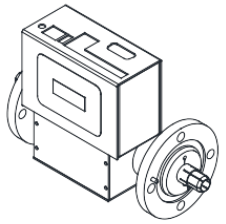

VIEW FOR REFERENCE ONLY

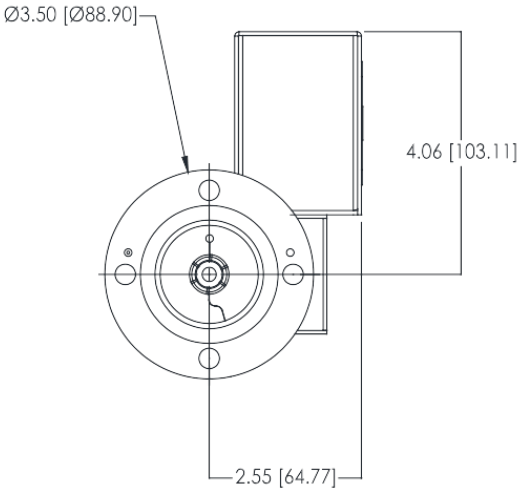

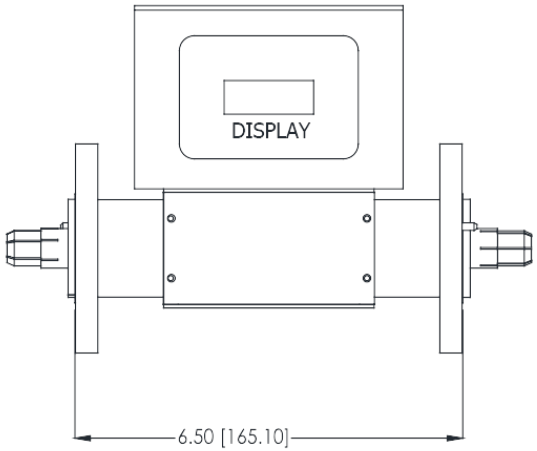

NOTES: UNLESS OTHERWISE SPECIFIED
1. CONNECTORS: J1-J2 1 5/8 (EIA)

	WPM11073
NEXT ASSY	USED ON
APPLICATION	

UNLESS OTHERWISE SPECIFIED
- INTERPRET DRAWING PER MIL-STD-100
- DIMENSIONING PER ASME Y14.5M-2009
- PARENTHETICAL INFO FOR REF ONLY
- DIMENSIONS ARE IN INCHES [mm]
- DIMENSIONAL LIMITS APPLY BEFORE PROCESSES
- TOLERANCES:
  ANGLES ± 2°
  3 PL ± .005 [.13]
  2 PL ± .015 [.4]
- REMOVE ALL BURRS AND SHARP EDGES R.01 MAX
- CONCENTRICITY MACHINED DIA: .002 FIM
- MACHINE TOOL MISMATCH .003 MAX

THIRD ANGLE PROJECTION

DWN	PLP	7/24/2015
CHK	CS	7/6/2020
ENGR		
MFGR		
QA		
RLSE		

WERLATONE SINCE 1965
17 Jon Barrett Rd
Patterson, NY 12563

TITLE: OUTLINE

SIZE	CAGE CODE	DWG NO	REV
B	28812	21340-505	A

SCALE 1:2 SHEET 1 OF 1

Restriction on use, duplication, or disclosure of proprietary information. This document contains proprietary information which is the sole property of Werlatone, Inc.
Werlatone, Inc. 17 Jon Barrett Road Patterson, NY 12563 T:(845)278-2220 F:(845)278-3440 sales@werlatone.com www.werlatone.com