WERLATONE

Model D9343

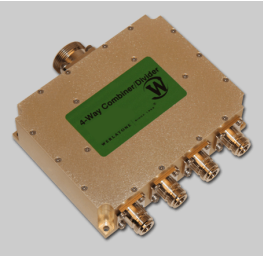

PRODUCT DATA SHEET **D9343**

Werlatone® ***Mismatch Tolerant®*** High Power Broadband RF Combiners and Dividers will operate into High Load VSWR Conditions, for extended periods, without damage. With extensive experience as a supplier to military platforms worldwide **Werlatone®** designs its High Power Broadband Combiners, Power Dividers, and N-Way Combiners for proper operation in the most stringent operating conditions.

Features:

High Power | Wide Bandwidths | Small Size | High Isolation | Custom Designs Available

Electrical Specifications:

Frequency:	1000 - 2500 MHz
Power:	1000 W CW
Insertion Loss:	0.5 dB Max.
VSWR:	1.35:1 Max.
Phase Balance:	± 5° Max.
Amplitude Balance:	0.25 dB Max.
Isolation:	10 dB Min.

Mechanical Specifications:

Type:	Connectorized
Material:	Aluminum 6061-T6
Surface Finish:	Chem. Film Per MIL-DTL-5541F Type I Class 3 (Yellow Iridite) RoHS Compliant Available
Operating Temperature:	-55°C to +75°C
Storage Temperature:	-60°C to +85°C
Weight:	2.625 lbs.
Size:	5.5 x 4.25 x 1.6''

Connector Configurations:

Model	**Sum Port (J1)**	**Input/Output (J2-J5)**
D9343-10	N Female	N Female
D9343-12	N Female	SMA
D9343-20	7/16 Female	N Female

When specified, Werlatone® High Power Combiners and RF Dividers will tolerate full input failures on adjacent port(s). This insures that remaining transmitter(s) may continue to operate until the amplifier system can be properly shut down for maintenance. Choose your specific connector configuration from a list of options. Additional connector configurations for our High Power RF Combiners/Dividers, Non-Coherent Combiners, and N-Way Combiners are available upon request.

Restriction on use, duplication, or disclosure of proprietary information. This document contains proprietary information which is the sole property of Werlatone, Inc.

Werlatone, Inc. 17 Jon Barrett Road Patterson, NY 12563 T:(845)278-2220 F:(845)278-3440 sales@werlatone.com www.werlatone.com

Model D9343

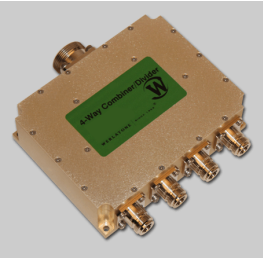

PRODUCT DATA SHEET **D9343**

Performance Data (Specifications subject to change without notice):

Insertion Loss:

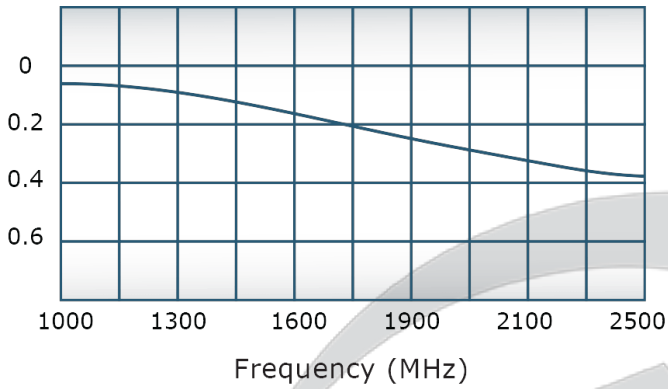

VSWR:

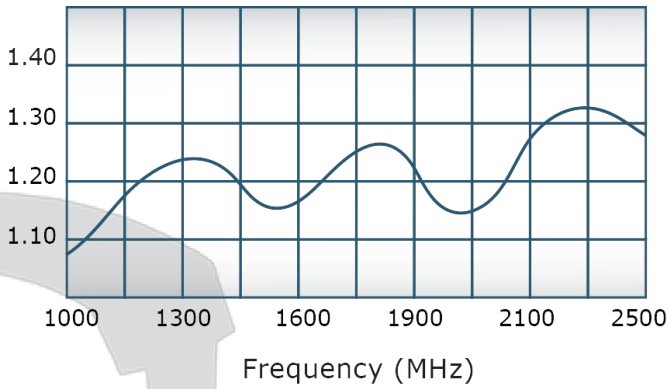

Since 1965:

Phase Balance:

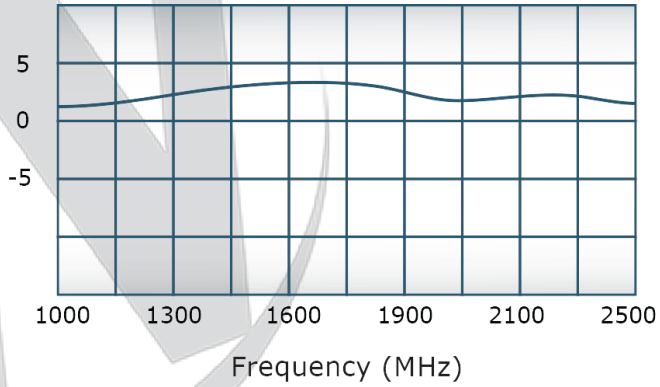

Restriction on use, duplication, or disclosure of proprietary information. This document contains proprietary information which is the sole property of Werlatone, Inc.

Werlatone, Inc. 17 Jon Barrett Road Patterson, NY 12563 T:(845)278-2220 F:(845)278-3440 sales@werlatone.com www.werlatone.com

RESTRICTION ON USE, DUPLICATION OR
DISCLOSURE OF PROPRIETARY INFORMATION
This document contains proprietary information
which is the sole property of Werlatone, Inc.

REVISIONS

REV.	REVISION RECORD	DATE	APPROVED
-	INITIAL RELEASE	3/1/2013	BW
A	ECN 8563	2/14/2014	BW
B	ECN 9844	10/3/2019	BW

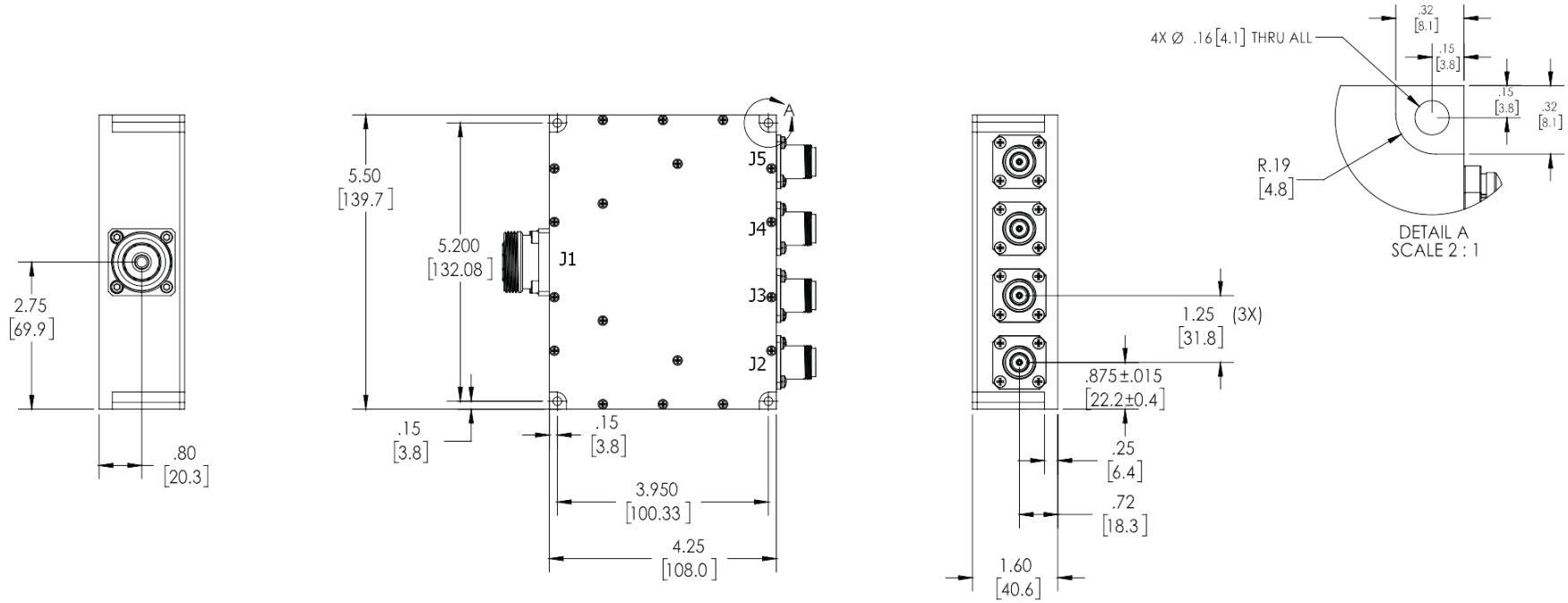

	D9811-20
21008-300A	D9343-20
NEXT ASSY	USED ON
APPLICATION	

UNLESS OTHERWISE SPECIFIED
- INTERPRET DRAWING IAW MIL-STD-100
- DIMENSIONING PER ASME Y14.5M-2009
- PARENTHETICAL INFO FOR REF ONLY
- DIMENSIONS ARE IN INCHES [mm]
- DIMENSIONAL LIMITS APPLY BEFORE PROCESSES
- TOLERANCES:
  ANGLES ± 2°
  3 PL ± .005 [.13]
  2 PL ± .015 [.38]

THIRD ANGLE PROJECTION

		DATE
DWN	GP	3/1/2013
CHK	CS	3/1/2013
ENGR		
MFGR		
QA		
RLSE		

WERLATONE SINCE 1965
17 Jon Barrett Rd
Patterson, NY 12563

TITLE

SIZE	CAGE CODE	DWG NO	REV
B	28812	21008-500	B

SCALE 1:2 SHEET 1 OF 1

Restriction on use, duplication, or disclosure of proprietary information. This document contains proprietary information which is the sole property of Werlatone, Inc.
Werlatone, Inc. 17 Jon Barrett Road Patterson, NY 12563 T:(845)278-2220 F:(845)278-3440 sales@werlatone.com www.werlatone.com