WERLATONE

Model D10055
Combiners In-Phase Connectorized



PRODUCT DATA SHEET **D10055**

Werlatone® ***Mismatch Tolerant®*** High Power Broadband RF Combiners and Dividers will operate into High Load VSWR Conditions, for extended periods, without damage. With extensive experience as a supplier to military platforms worldwide **Werlatone®** designs its High Power Broadband Combiners, Power Dividers, and N-Way Combiners for proper operation in the most stringent operating conditions.

Features:

High Power | Wide Bandwidths | Small Size | High Isolation | Custom Designs Available

Electrical Specifications:

Frequency:	960 - 1215 MHz
Power:	200 W CW
Insertion Loss:	0.2 dB Max.
VSWR:	1.30:1 Max.
Phase Balance:	± 2° Max.
Amplitude Balance:	0.1 dB Max.
Isolation:	18 dB Min.

Mechanical Specifications:

Type:	Connectorized
Material:	Aluminum 6061-T6
Surface Finish:	Chem. Film Per MIL-DTL-5541F Type II Class 3 (Clear Iridite) RoHS Compliant Available
Operating Temperature:	-55°C to +75°C
Storage Temperature:	-60°C to +85°C
Weight:	18 oz. (-10)
Size:	3.4 x 3.7 x 1.16''

Connector Configurations:

Model	**Sum Port (J1)**	**Input/Output (J2)**	**Input/Output (J3)**
D10055-10	N Female	N Female	N Female
D10055-12	N Female	SMA	SMA

When specified, Werlatone® High Power Combiners and RF Dividers will tolerate full input failures on adjacent port(s). This insures that remaining transmitter(s) may continue to operate until the amplifier system can be properly shut down for maintenance. Choose your specific connector configuration from a list of options. Additional connector configurations for our High Power RF Combiners/Dividers, Non-Coherent Combiners, and N-Way Combiners are available upon request.

Restriction on use, duplication, or disclosure of proprietary information. This document contains proprietary information which is the sole property of Werlatone, Inc.
Werlatone, Inc. 17 Jon Barrett Road Patterson, NY 12563 T:(845)278-2220 F:(845)278-3440 sales@werlatone.com www.werlatone.com

Werlatone, Inc.All Rights Reserved

WERLATONE

Model D10055
Combiners In-Phase Connectorized



PRODUCT DATA SHEET **D10055**

Performance Data (Specifications subject to change without notice):

Insertion Loss:

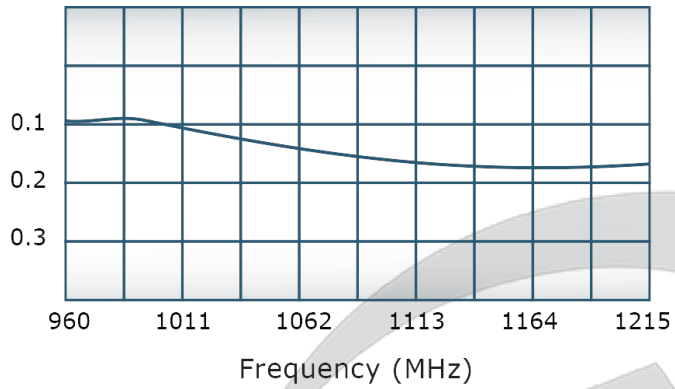

VSWR:

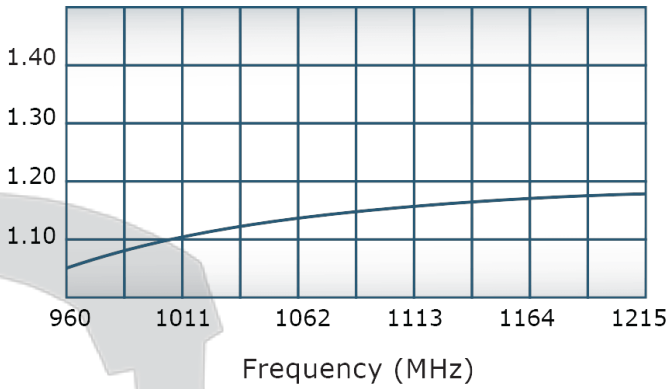

Isolation:

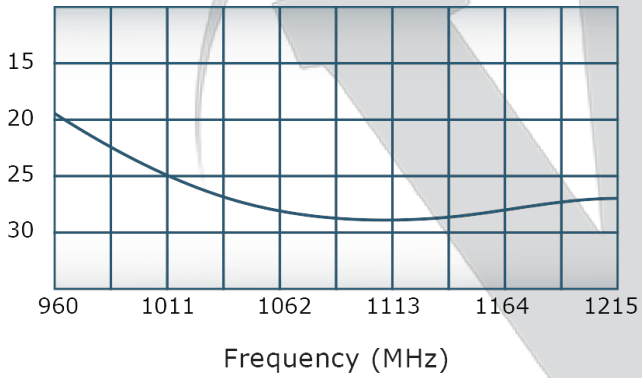

Phase Balance:

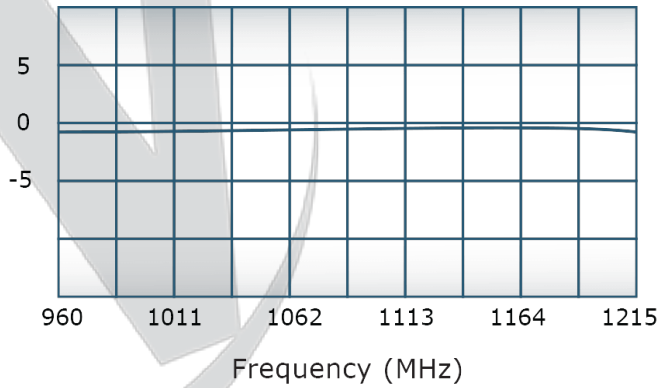

Restriction on use, duplication, or disclosure of proprietary information. This document contains proprietary information which is the sole property of Werlatone, Inc.
Werlatone, Inc. 17 Jon Barrett Road Patterson, NY 12563 T:(845)278-2220 F:(845)278-3440 sales@werlatone.com www.werlatone.com

Werlatone, Inc.All Rights Reserved

RESTRICTION ON USE, DUPLICATION OR
DISCLOSURE OF PROPRIETARY INFORMATION
This document contains proprietary information
which is the sole property of Werlatone, Inc.

REVISION HISTORY			
REV.	REVISION RECORD	DATE	APPROVED
A	ECN 9696	11/20/2019	RB

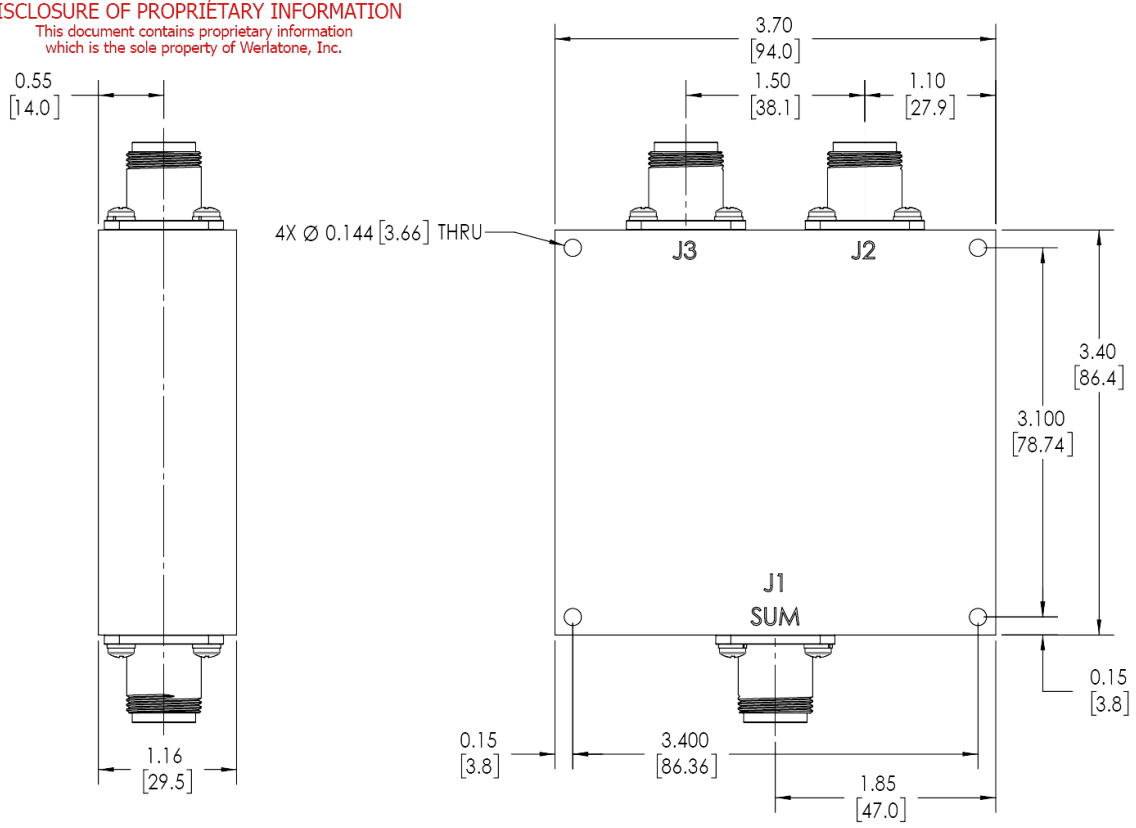

NOTES: UNLESS OTHERWISE SPECIFIED

1. **MATERIAL: ALUMINUM 6061-T6**
2. **FINISH: CHEM FILM PER MIL-DTL-5541F TYPE I CLASS 3 (YELLOW IRIDITE)**
3. **CONNECTORS:**
   J1-J3: N FEMALE

NEXT ASSY	USED ON
APPLICATION	

UNLESS OTHERWISE SPECIFIED
INTERPRET DRAWING IAW MIL-STD-100
DIMENSIONING PER ASME Y14.5M-2009
PARENTHETICAL INFO FOR REF ONLY
DIMENSIONS ARE IN INCHES
DIMENSIONAL LIMITS APPLY BEFORE PROCESSES
TOLERANCES:
ANGLES ± 2°
3 PL ± .005 [.13]
2 PL ± .015 [.38]
REMOVE ALL BURRS AND SHARP EDGES R.01 MAX
CONCENTRICITY MACHINED DIA: .002 FIM
MACHINE TOOL MISMATCH .003 MAX

THIRD ANGLE PROJECTION

DWN	SD	11/20/2019
CHK	CS	11/20/2019
ENGR		
MFGR		
QA		
RLSE		

WERLATONE| SINCE 1965
17 Jon Barrett Rd
Patterson, NY 12563

TITLE
OUTLINE

SIZE	CAGE CODE	DWG NO	REV
B		20223-500	A

SCALE 1:1 SHEET 1 OF 1

Restriction on use, duplication, or disclosure of proprietary information. This document contains proprietary information which is the sole property of Werlatone, Inc.
Werlatone, Inc. 17 Jon Barrett Road Patterson, NY 12563 T:(845)278-2220 F:(845)278-3440 sales@werlatone.com www.werlatone.com