WERLATONE

Model QH9497
90° Hybrids Surface Mount (SMT) & Drop



PRODUCT DATA SHEET **QH9497**

Our patented 3 dB 90° Hybrid Couplers provide:

- Superior component performance starting at 3:1 Bandwidth.
- Thicker center boards for high power and increased repeatability.
- Bonded structures which eliminate any air gaps between substrates.
- More sections per bandwidth for better coupling flatness.
- Electrically shorter and physically smaller RF components.

Features:

High Power Wide Bandwidths Small Size Excellent Amplitude Balance

Electrical Specifications:

Frequency:	200 - 600 MHz
Power:	200 W CW
Insertion Loss	0.4 dB Max.
VSWR:	1.30:1 Max.
Phase Balance:	± 5° dB Max.
Amplitude Balance:	± 0.35 dB Max.
Isolation:	20 dB Min.

Mechanical Specifications:

Type:	Surface Mount
Plating Options:	QH9496-Pb: Electrodeposited Tin/Lead
Size:	2.8 x 1.25 x 0.16''

Port Configurations:

		Output		
Input	**J1**	**J2**	**J3**	**J4**
J1	---	Isolated	-3 dB, 0°	-3 dB, -90°
J2	Isolated	---	-3 dB, -90°	-3 dB, 0°
J3	-3 dB, 0°	-3 dB, -90°	---	Isolated
J4	-3 dB, -90°	-3 dB, 0°	Isolated	---

Werlatone's breakthrough technology allows us to build our existing line of Broadband 3 dB High Power 90° Hybrid Couplers. Connectorized 3 dB 90° Hybrid Coupler models are available with a choice of connectors. Several of our existing High Power 3 dB 90° RF Couplers are three port designs, wherein the difference port is internally terminated with a high power termination. This eliminates the need for a customer supplied external load for each Hybrid Coupler.

Restriction on use, duplication, or disclosure of proprietary information. This document contains proprietary information which is the sole property of Werlatone, Inc.
Werlatone, Inc. 17 Jon Barrett Road Patterson, NY 12563 T:(845)278-2220 F:(845)278-3440 sales@werlatone.com www.werlatone.com

Werlatone, Inc.All Rights Reserved

WERLATONE

Model QH9497
90° Hybrids Surface Mount (SMT) & Drop



PRODUCT DATA SHEET **QH9497**

Performance Data (Specifications subject to change without notice):

Coupling:

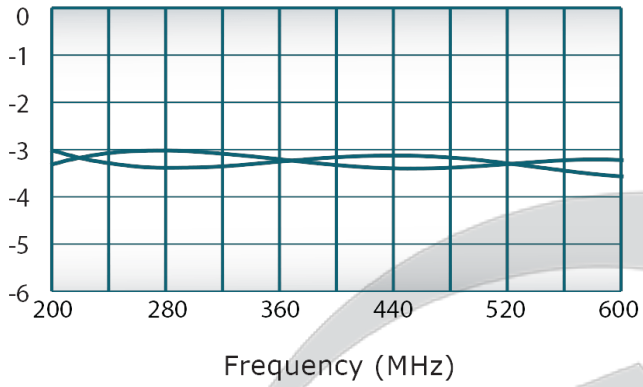

VSWR:

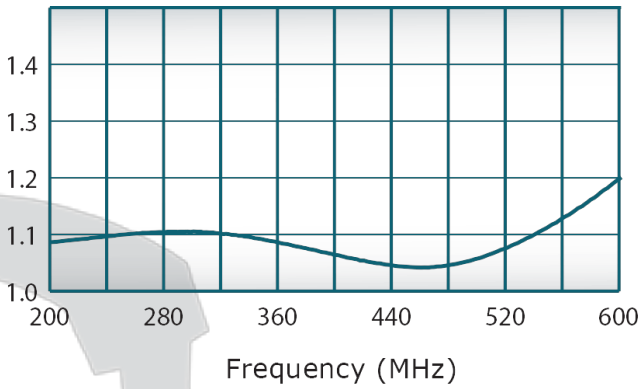

Isolation:

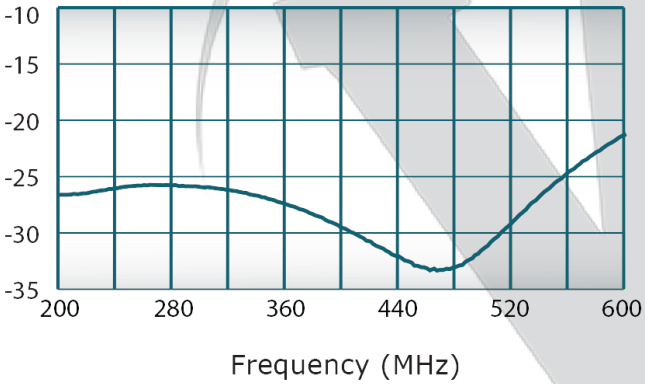

Phase Balance:

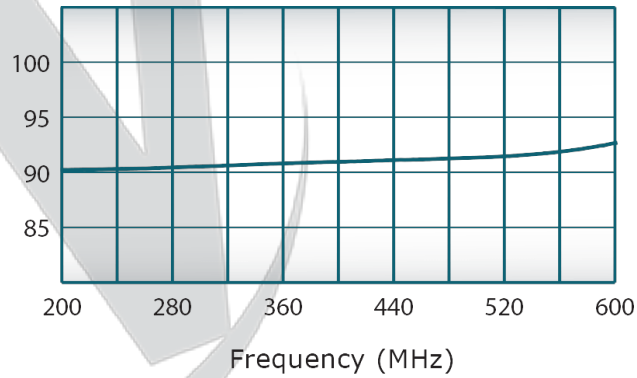

Restriction on use, duplication, or disclosure of proprietary information. This document contains proprietary information which is the sole property of Werlatone, Inc.
Werlatone, Inc. 17 Jon Barrett Road Patterson, NY 12563 T:(845)278-2220 F:(845)278-3440 sales@werlatone.com www.werlatone.com

Werlatone, Inc.All Rights Reserved

RESTRICTION ON USE, DUPLICATION OR
DISCLOSURE OF PROPRIETARY INFORMATION
This document contains proprietary information
which is the sole property of Werlatone, Inc.

REVISION HISTORY			
REV	REVISION RECORD	DATE	APPROVED
-	INITIAL RELEASE	2/12/2013	

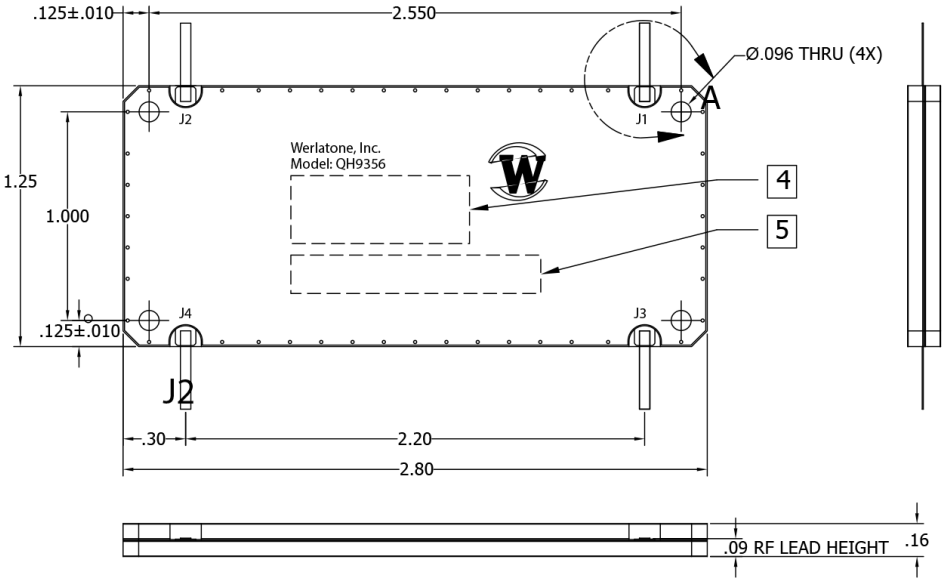

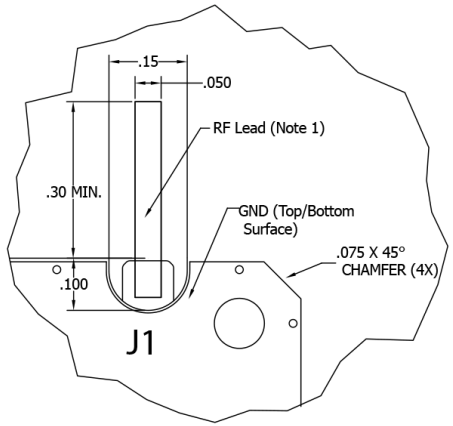

DETAIL A (4X)
SCALE 5:1

UNLESS OTHERWISE SPECIFIED					
· INTERPRET DRAWING IAW MIL-STD-100 · DIMENSIONING PER ASME Y14.5M-2009 · PARENTHETICAL INFO FOR REF ONLY · DIMENSIONS ARE IN INCHES · DIMENSIONAL LIMITS APPLY BEFORE PROCESSES · TOLERANCES: ANGLES ± 2° 3 PL ± .005 2 PL ± .015 · HOLE SIZE TOLERANCES: ±.004	DWN	GP	6/15/12	WERLATONE | SINCE 1965	17 Jon Barrett Rd Patterson, NY 12563
	CHK	CS	6/15/12	TITLE	
	ENGR	GP	6/15/12		
	MFGR			SIZE: B	CAGE CODE: 28812
	QA			DWG NO: 20899-500	REV: -
THIRD ANGLE PROJECTION	RLSE			SCALE: 2:1	SHEET 1 OF 1

Restriction on use, duplication, or disclosure of proprietary information. This document contains proprietary information which is the sole property of Werlatone, Inc.
Werlatone, Inc. 17 Jon Barrett Road Patterson, NY 12563 T:(845)278-2220 F:(845)278-3440 sales@werlatone.com www.werlatone.com