DECADES AHEAD®

high power RF devices

Werlatone®, Inc.
17 Jon Barrett Road Patterson, New York 12563
T (845) 278 2220 www.werlatone.com
F (845) 278 3440 sales@werlatone.com

50 dB Dual Directional Coupler

Model C10006

Frequency:	700 - 4200 MHz
Power:	2000 W CW
Coupling:	50 ± 1.0 dB Nom.
Insertion Loss:	0.2 dB Max. *
VSWR:	1.35:1 Max.
Flatness:	± 1.0 dB Max.
Directivity:	18 dB Min.

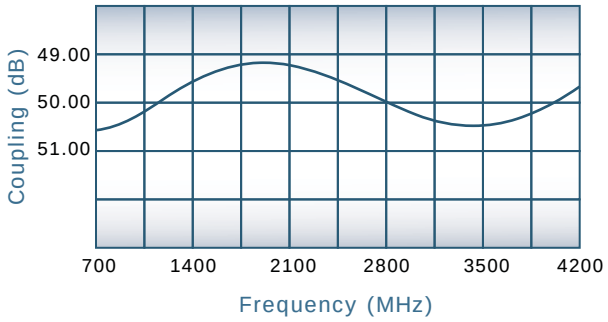

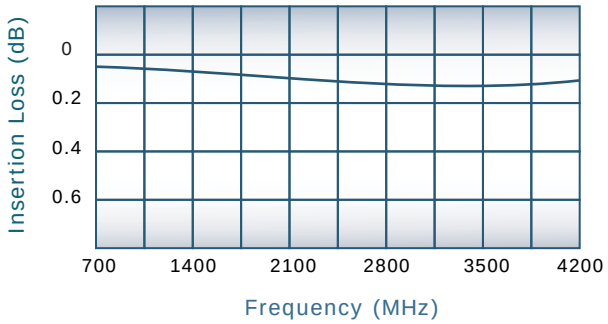

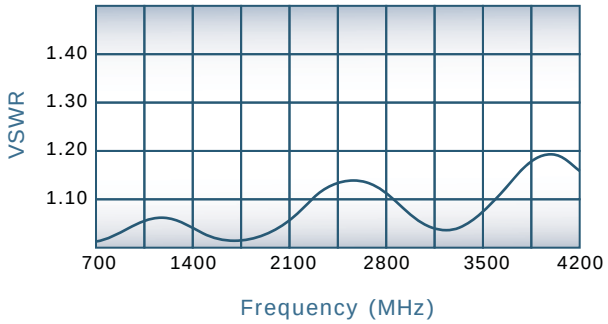

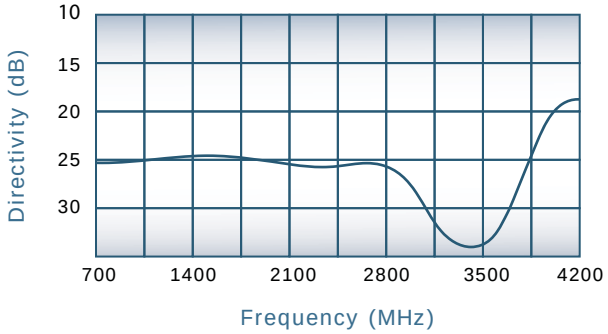

Notes

* Does not include theoretical coupling loss
- All specifications guaranteed
- Test data provided with each unit shipped
- Operating Temperature: -55°C to +75°C
- Uni-Directional version available

Connector Configurations

Model	J1,J2 (Main Line)	J3,J4 (Coupled Ports)
C10006-20	7/16 Female	N Female
C10006-22	7/16 Female	SMA
C10006-23	7/16 Female	BNC

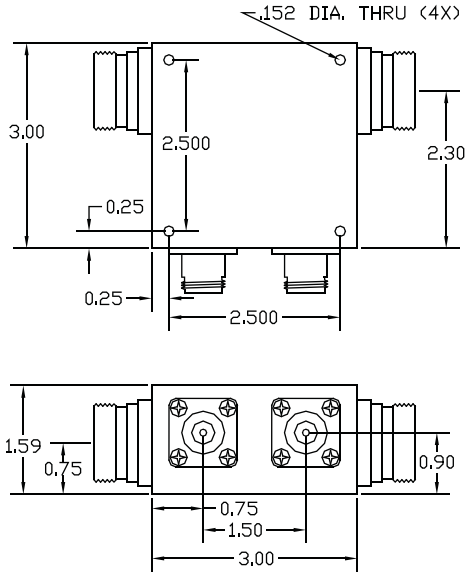

Specifications subject to change without notice

Send Us Your Specs for Custom Designs